Deep groove ball bearing 626 .ZZC3 SNR

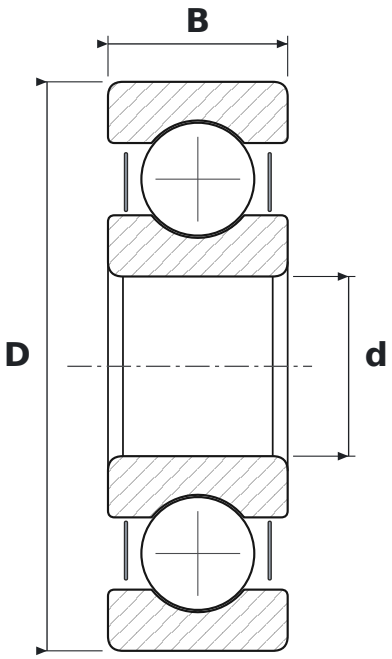

DIMENSIONS

d	bore diameter	**6 mm**
D	outside diameter	**19 mm**
B	width	**6 mm**

WHAT 626 .ZZC3 MEANS

ZZ	blaszki ochronne, dwustronne
C3	radial clearance greater than normal

SPECIFICATIONS

Manufacturer	**SNR**
Manufacturer designation	**626 .ZZC3**
Rolling elements	**single-row ball bearing**