Deep groove ball bearing 626-2Z/WT SKF

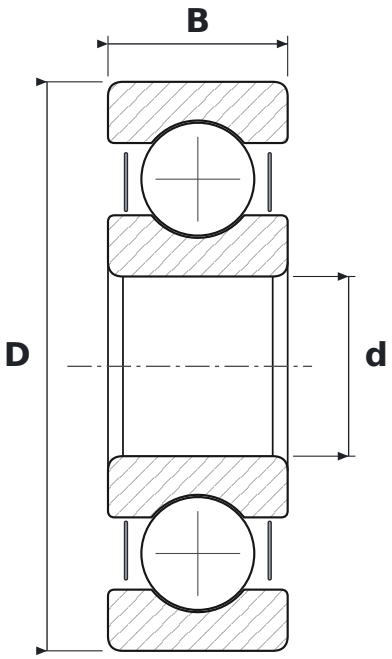

DIMENSIONS

d	bore diameter	**6 mm**
D	outside diameter	**19 mm**
B	width	**6 mm**

WHAT 626-2Z/WT MEANS

2Z	steel shields, both sides
WT	smar o szerokim zakresie temperatur: zagęszczacz polimocznikowy, olej estrowy, NLGI 2–3

SPECIFICATIONS

Manufacturer	**SKF**
Manufacturer designation	**626-2Z/WT**
Rolling elements	**single-row ball bearing**
Mass	**0.008 kg**