Deep groove ball bearing 627-2ZC3 NKE

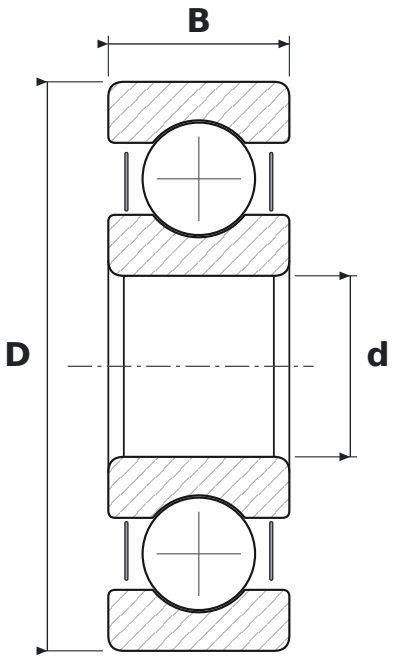

DIMENSIONS

d	bore diameter	**7 mm**
D	outside diameter	**22 mm**
B	width	**7 mm**

WHAT 627-2ZC3 MEANS

2Z	steel shields, both sides
C3	radial clearance greater than normal

SPECIFICATIONS

Manufacturer	**NKE**
Manufacturer designation	**627-2ZC3**
Rolling elements	**single-row ball bearing**
Mass	**0.01 kg**