Deep groove ball bearing 627-ZZC35K NTN

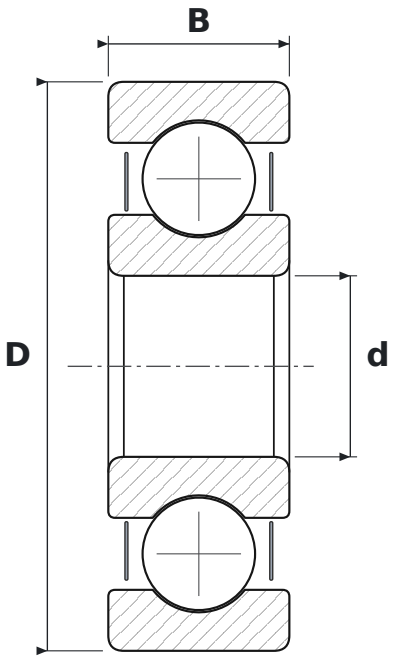

DIMENSIONS

d	bore diameter	**7 mm**
D	outside diameter	**22 mm**
B	width	**7 mm**

WHAT 627-ZZC35K MEANS

ZZ	blaszki ochronne, dwustronne
C3	radial clearance greater than normal
5K	smar Kyodo Yushi Multemp SRL (od −40 do +150 °C)

SPECIFICATIONS

Manufacturer	**NTN**
Manufacturer designation	**627-ZZC35K**
Rolling elements	**single-row ball bearing**
Mass	**0.014 kg**