CASTOMER

DATASHEET

Deep groove ball bearing 629-2RSC3LHT23 SKF

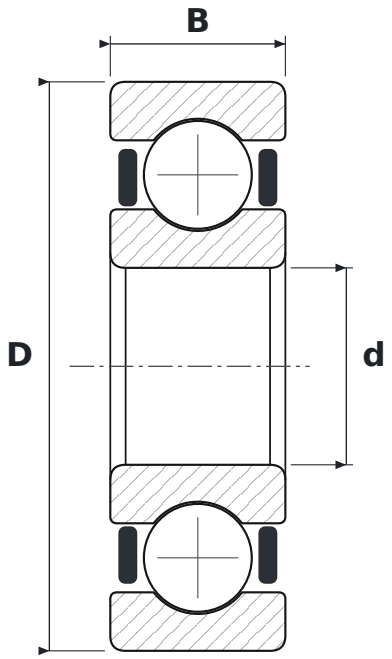

DIMENSIONS

d	bore diameter	**9 mm**
D	outside diameter	**26 mm**
B	width	**8 mm**

WHAT 629-2RSC3LHT23 MEANS

2RS	contact rubber seals, both sides
C3	radial clearance greater than normal
LHT23	smar o szerokim zakresie temperatur do cichej pracy: mydło litowe, olej estrowy, NLGI 2–3

SPECIFICATIONS

Manufacturer	**SKF**
Manufacturer designation	**629-2RSC3LHT23**
Rolling elements	**single-row ball bearing**