Deep groove ball bearing 629-2RSHC3 SKF

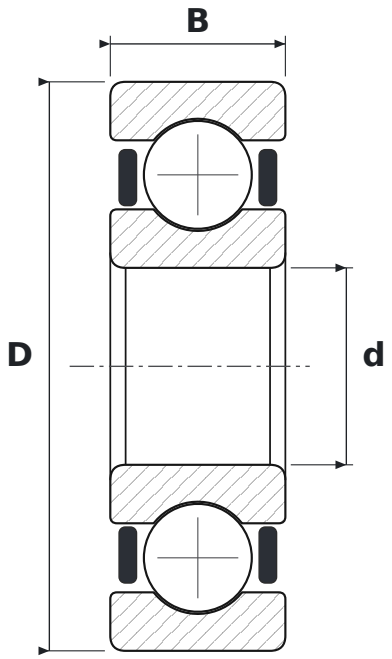

DIMENSIONS

d	bore diameter	**9 mm**
D	outside diameter	**26 mm**
B	width	**8 mm**

WHAT 629-2RSHC3 MEANS

2RSH	uszczelnienia stykowe z kauczuku NBR wzmocnione blachą stalową, dwustronne
C3	radial clearance greater than normal

SPECIFICATIONS

Manufacturer	**SKF**
Manufacturer designation	**629-2RSHC3**
Rolling elements	**single-row ball bearing**