Deep groove ball bearing 629-2Z NKE

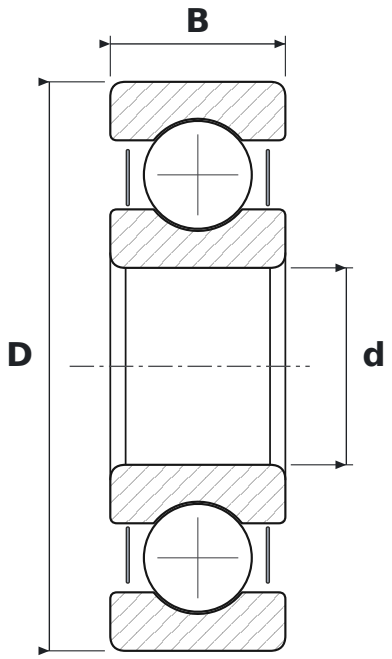

DIMENSIONS

d	bore diameter	**9 mm**
D	outside diameter	**26 mm**
B	width	**8 mm**

SPECIFICATIONS

Manufacturer	**NKE**
Manufacturer designation	**629-2Z**
Rolling elements	**single-row ball bearing**
2Z	**steel shields, both sides**
Radial internal clearance	**CN – normal**
Mass	**0.02 kg**