Deep groove ball bearing 629-A4MC3E NSK

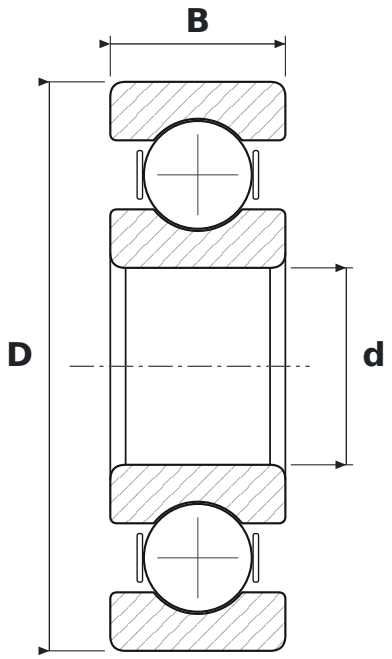

DIMENSIONS

d	bore diameter	**9 mm**
D	outside diameter	**26 mm**
B	width	**8 mm**

SPECIFICATIONS

Manufacturer	**NSK**
Manufacturer designation	**629-A4MC3E**
Rolling elements	**single-row ball bearing**
C3	**radial clearance greater than normal**
E	**reinforced design, higher load rating**
Seal	**open – no seals**
Mass	**0.02 kg**