Deep groove ball bearing 629-C FAG

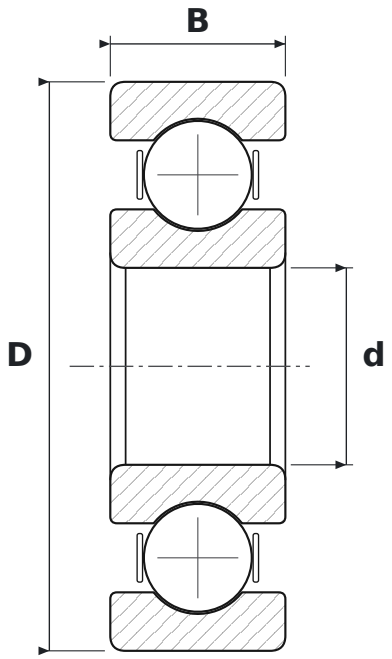

DIMENSIONS

d	bore diameter	**9 mm**
D	outside diameter	**26 mm**
B	width	**8 mm**

SPECIFICATIONS

Manufacturer	**FAG**
Manufacturer designation	**629-C**
Rolling elements	**single-row ball bearing**
Seal	**open – no seals**
Radial internal clearance	**CN – normal**
Mass	**0.019 kg**