Deep groove ball bearing 63/22 NRC3 NTN

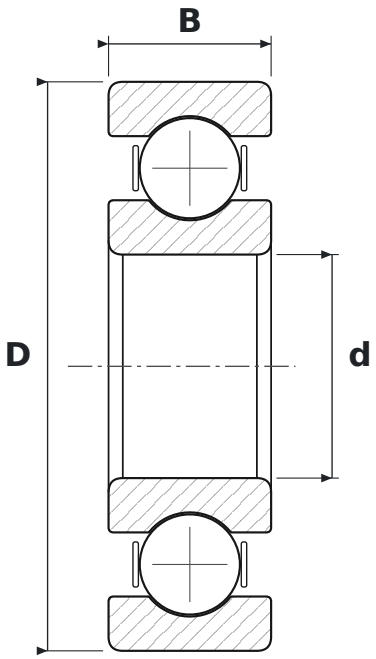

DIMENSIONS

d	bore diameter	**22 mm**
D	outside diameter	**56 mm**
B	width	**16 mm**

WHAT 63/22 NRC3 MEANS

63	łożysko kulkowe zwykłe (6), seria średnic 3 – średnia
NR	snap ring groove with snap ring
C3	radial clearance greater than normal

SPECIFICATIONS

Manufacturer	**NTN**
Manufacturer designation	**63/22 NRC3**
Rolling elements	**single-row ball bearing**
Mass	**0.185 kg**