Deep groove ball bearing 63/22 X NACHI

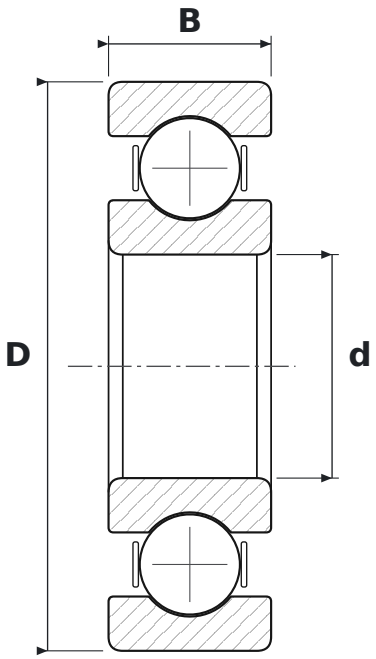

DIMENSIONS

d	bore diameter	**22 mm**
D	outside diameter	**56 mm**
B	width	**16 mm**

SPECIFICATIONS

Manufacturer	**NACHI**
Manufacturer designation	**63/22 X**
Rolling elements	**single-row ball bearing**
Seal	**open – no seals**
Radial internal clearance	**CN – normal**