Deep groove ball bearing 63/22 XC3 NACHI

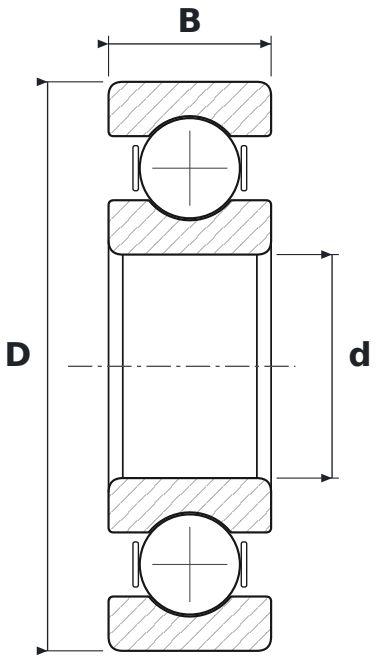

DIMENSIONS

d	bore diameter	**22 mm**
D	outside diameter	**56 mm**
B	width	**16 mm**

SPECIFICATIONS

Manufacturer	**NACHI**
Manufacturer designation	**63/22 XC3**
Rolling elements	**single-row ball bearing**
C3	**radial clearance greater than normal**
Seal	**open – no seals**