Deep groove ball bearing 63/28 ZZ NSK

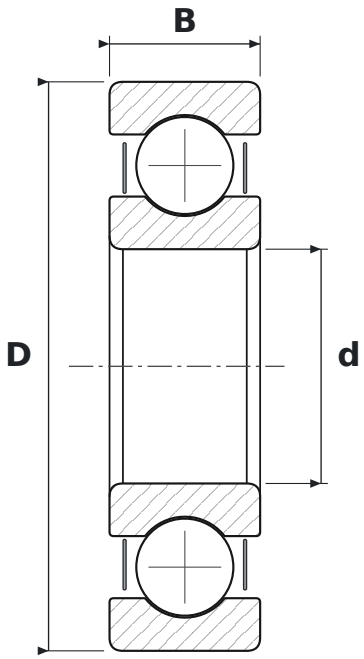

DIMENSIONS

d	bore diameter	**28 mm**
D	outside diameter	**68 mm**
B	width	**18 mm**

WHAT 63/28 ZZ MEANS

63	łożysko kulkowe zwykłe (6), seria średnic 3 – średnia
ZZ	blaszki ochronne, dwustronne

SPECIFICATIONS

Manufacturer	**NSK**
Manufacturer designation	**63/28 ZZ**
Rolling elements	**single-row ball bearing**