Deep groove ball bearing 63/32-ZNRC3 NSK

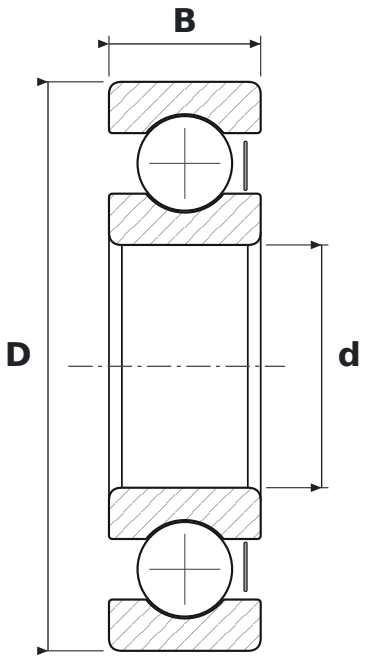

DIMENSIONS

d	bore diameter	**32 mm**
D	outside diameter	**75 mm**
B	width	**20 mm**

WHAT 63/32-ZNRC3 MEANS

63	łożysko kulkowe zwykłe (6), seria średnic 3 – średnia
Z	steel shield, one side
NR	snap ring groove with snap ring
C3	radial clearance greater than normal

SPECIFICATIONS

Manufacturer	**NSK**
Manufacturer designation	**63/32-ZNRC3**
Rolling elements	**single-row ball bearing**
Mass	**0.385 kg**