# Deep groove ball bearing 6301-NSE9CM NACHI

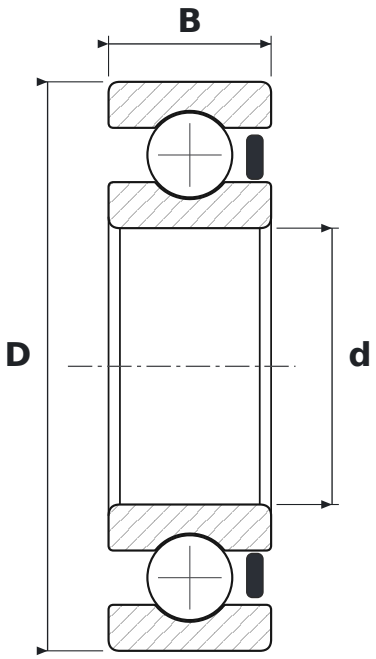


## DIMENSIONS

| | | |
|---|---|---|
| **d** | bore diameter | **17 mm** |
| **D** | outside diameter | **35 mm** |
| **B** | width | **10 mm** |

## SPECIFICATIONS

| | |
|---|---|
| Manufacturer | **NACHI** |
| Manufacturer designation | **6301-NSE9CM** |
| Rolling elements | **single-row ball bearing** |
| RS | **contact rubber seal, one side** |
| CM | **clearance for electric motors (quiet running)** |
| Radial internal clearance | **CN – normal** |