Deep groove ball bearing 6302-C-C3 FAG

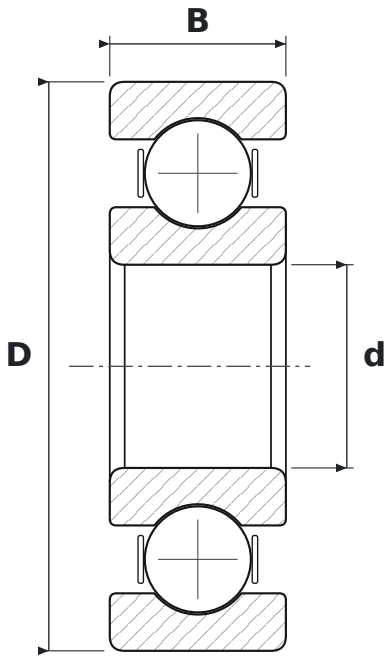

DIMENSIONS

d	bore diameter	**15 mm**
D	outside diameter	**42 mm**
B	width	**13 mm**

WHAT 6302-C-C3 MEANS

63	łożysko kulkowe zwykłe (6), seria średnic 3 – średnia
C	generation C – revised internal design (FAG)
C3	radial clearance greater than normal

SPECIFICATIONS

Manufacturer	**FAG**
Manufacturer designation	**6302-C-C3**
Rolling elements	**single-row ball bearing**