Deep groove ball bearing 6302 ZZC3 KOYO

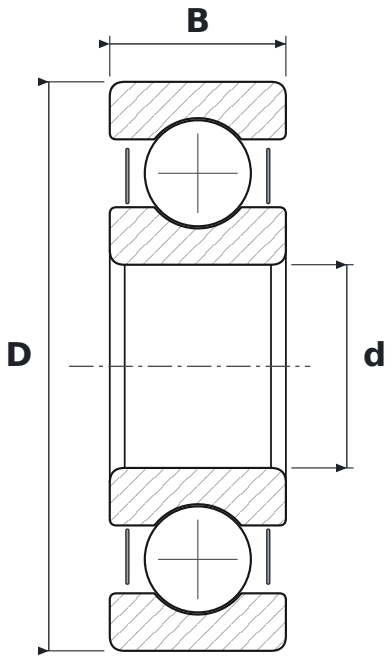

DIMENSIONS

d	bore diameter	**15 mm**
D	outside diameter	**42 mm**
B	width	**13 mm**

WHAT 6302 ZZC3 MEANS

63	łożysko kulkowe zwykłe (6), seria średnic 3 – średnia
ZZ	blaszki ochronne, dwustronne
C3	radial clearance greater than normal

SPECIFICATIONS

Manufacturer	**KOYO**
Manufacturer designation	**6302 ZZC3**
Rolling elements	**single-row ball bearing**