Deep groove ball bearing 6302-ZZC35K NTN

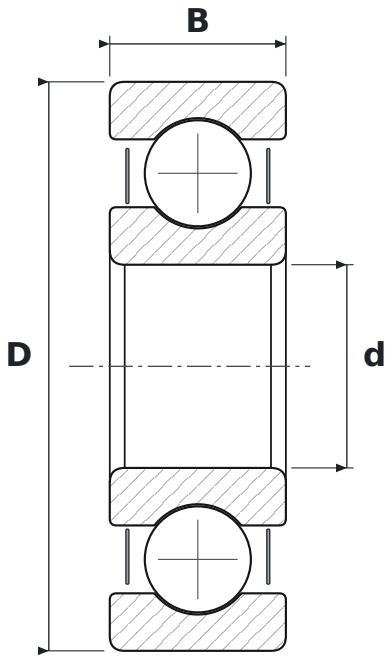

DIMENSIONS

d	bore diameter	**15 mm**
D	outside diameter	**42 mm**
B	width	**13 mm**

WHAT 6302-ZZC35K MEANS

63	łożysko kulkowe zwykłe (6), seria średnic 3 – średnia
ZZ	blaszki ochronne, dwustronne
C3	radial clearance greater than normal
5K	smar Kyodo Yushi Multemp SRL (od −40 do +150 °C)

SPECIFICATIONS

Manufacturer	**NTN**
Manufacturer designation	**6302-ZZC35K**
Rolling elements	**single-row ball bearing**
Mass	**0.09 kg**