# Deep groove ball bearing 6302-2Z/C3GJN SKF

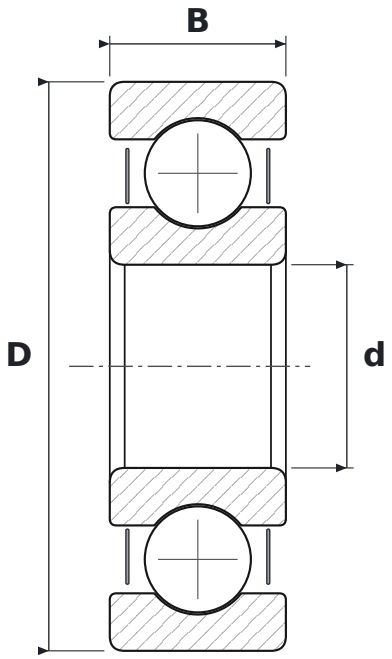


## DIMENSIONS

| | | |
|---|---|---|
| **d** | bore diameter | **15 mm** |
| **D** | outside diameter | **42 mm** |
| **B** | width | **13 mm** |

## WHAT 6302-2Z/C3GJN MEANS

| | |
|---|---|
| **63** | łożysko kulkowe zwykłe (6), seria średnic 3 – średnia |
| **2Z** | steel shields, both sides |
| **C3** | radial clearance greater than normal |
| **GJN** | smar wysokotemperaturowy: zagęszczacz polimocznikowy, olej mineralny, NLGI 2 |

## SPECIFICATIONS

| | |
|---|---|
| Manufacturer | **SKF** |
| Manufacturer designation | **6302-2Z/C3GJN** |
| Rolling elements | **single-row ball bearing** |
| Basic dynamic load rating C | **11.9 kN** |
| Basic static load rating C0 | **5.4 kN** |
| Mass | **0.084 kg** |