Deep groove ball bearing 6302-2Z/C3WT SKF

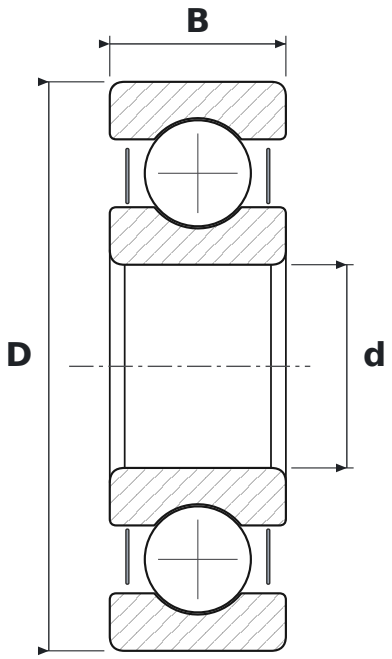

DIMENSIONS

d	bore diameter	**15 mm**
D	outside diameter	**42 mm**
B	width	**13 mm**

WHAT 6302-2Z/C3WT MEANS

63	łożysko kulkowe zwykłe (6), seria średnic 3 – średnia
2Z	steel shields, both sides
C3	radial clearance greater than normal
WT	smar o szerokim zakresie temperatur: zagęszczacz polimocznikowy, olej estrowy, NLGI 2–3

SPECIFICATIONS

Manufacturer	**SKF**
Manufacturer designation	**6302-2Z/C3WT**
Rolling elements	**single-row ball bearing**
Basic dynamic load rating C	**11.9 kN**
Basic static load rating C0	**5.4 kN**
Mass	**0.084 kg**