Deep groove ball bearing 6303-2RSC3 KOYO

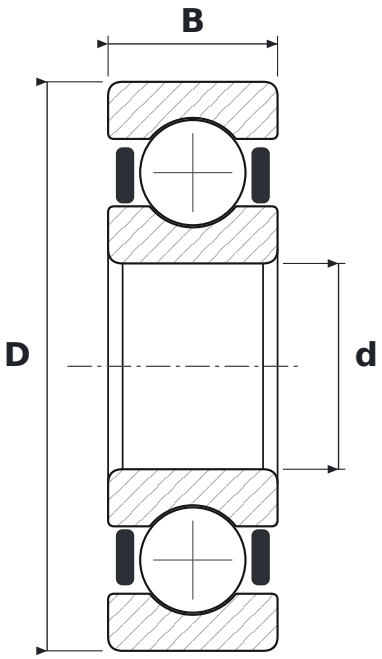

DIMENSIONS

d	bore diameter	**17 mm**
D	outside diameter	**47 mm**
B	width	**14 mm**

WHAT 6303-2RSC3 MEANS

63	łożysko kulkowe zwykłe (6), seria średnic 3 – średnia
2RS	uszczelnienia stykowe, dwustronne
C3	radial clearance greater than normal

SPECIFICATIONS

Manufacturer	**KOYO**
Manufacturer designation	**6303-2RSC3**
Rolling elements	**single-row ball bearing**