Deep groove ball bearing 6303-2Z NKE

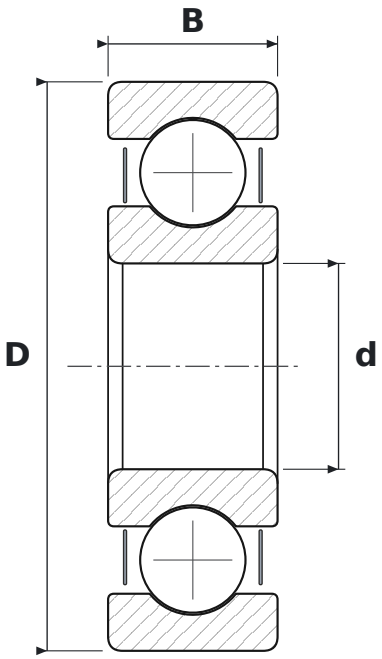

DIMENSIONS

d	bore diameter	**17 mm**
D	outside diameter	**47 mm**
B	width	**14 mm**

WHAT 6303-2Z MEANS

63	łożysko kulkowe zwykłe (6), seria średnic 3 – średnia
2Z	steel shields, both sides

SPECIFICATIONS

Manufacturer	**NKE**
Manufacturer designation	**6303-2Z**
Rolling elements	**single-row ball bearing**