Deep groove ball bearing 6303-C-2HRS-C3 FAG

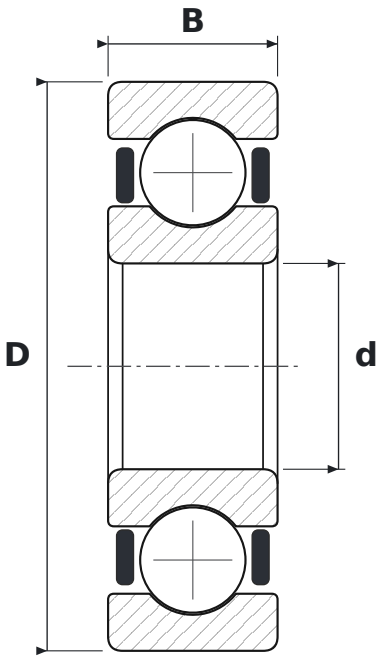

DIMENSIONS

d	bore diameter	**17 mm**
D	outside diameter	**47 mm**
B	width	**14 mm**

WHAT 6303-C-2HRS-C3 MEANS

63	łożysko kulkowe zwykłe (6), seria średnic 3 – średnia
C	generation C – revised internal design (FAG)
2HRS	uszczelnienia wargowe stykowe (NBR), dwustronne – warga przylega osiowo
C3	radial clearance greater than normal

SPECIFICATIONS

Manufacturer	**FAG**
Manufacturer designation	**6303-C-2HRS-C3 (-2RSR-C3)**
Rolling elements	**single-row ball bearing**