Deep groove ball bearing 6303-C FAG

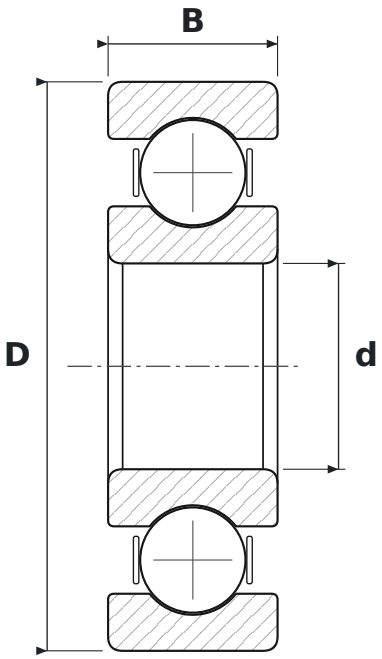

DIMENSIONS

d	bore diameter	**17 mm**
D	outside diameter	**47 mm**
B	width	**14 mm**

WHAT 6303-C MEANS

63	łożysko kulkowe zwykłe (6), seria średnic 3 – średnia
C	generation C – revised internal design (FAG)

SPECIFICATIONS

Manufacturer	**FAG**
Manufacturer designation	**6303-C**
Rolling elements	**single-row ball bearing**