# Deep groove ball bearing 6303-ZZ-C3 TIMKEN

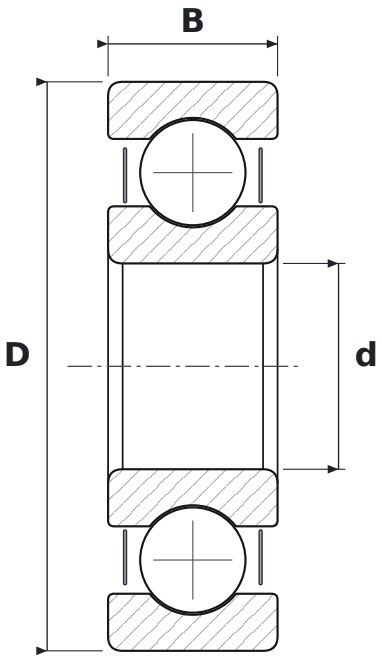


## DIMENSIONS

| | | |
|---|---|---|
| **d** | bore diameter | **17 mm** |
| **D** | outside diameter | **47 mm** |
| **B** | width | **14 mm** |

## WHAT 6303-ZZ-C3 MEANS

| | |
|---|---|
| **63** | łożysko kulkowe zwykłe (6), seria średnic 3 – średnia |
| **ZZ** | blaszki ochronne, dwustronne |
| **C3** | radial clearance greater than normal |

## SPECIFICATIONS

| | |
|---|---|
| Manufacturer | **TIMKEN** |
| Manufacturer designation | **6303-ZZ-C3** |
| Rolling elements | **single-row ball bearing** |