# Deep groove ball bearing 6303-2Z SKF

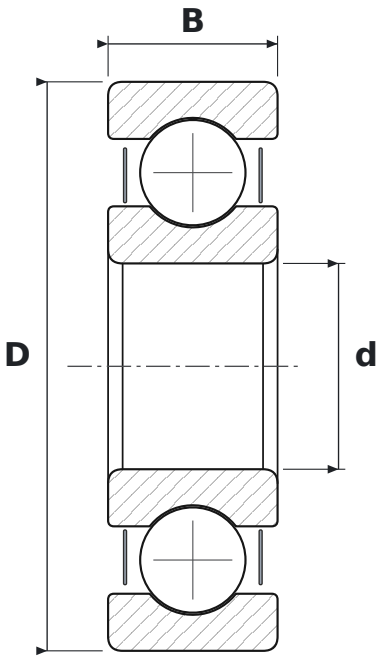


## DIMENSIONS

| | | |
|---|---|---|
| **d** | bore diameter | **17 mm** |
| **D** | outside diameter | **47 mm** |
| **B** | width | **14 mm** |

## WHAT 6303-2Z MEANS

| | |
|---|---|
| **63** | łożysko kulkowe zwykłe (6), seria średnic 3 – średnia |
| **2Z** | steel shields, both sides |

## SPECIFICATIONS

| | |
|---|---|
| Manufacturer | **SKF** |
| Manufacturer designation | **6303-2Z** |
| Rolling elements | **single-row ball bearing** |
| Basic dynamic load rating C | **13.5 kN** |
| Basic static load rating C0 | **6.55 kN** |
| Mass | **0.112 kg** |