Deep groove ball bearing 6304 C4 KOYO

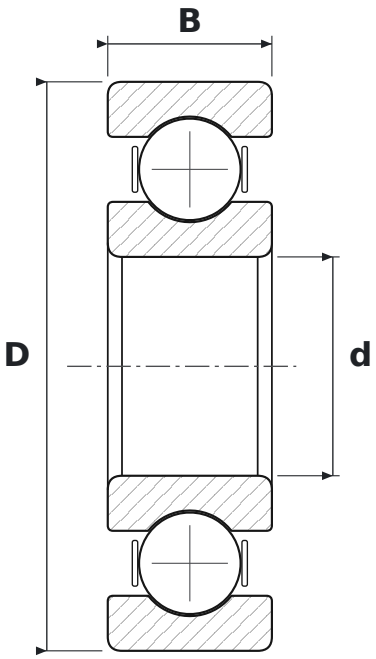

DIMENSIONS

d	bore diameter	**20 mm**
D	outside diameter	**52 mm**
B	width	**15 mm**

WHAT 6304 C4 MEANS

63	łożysko kulkowe zwykłe (6), seria średnic 3 – średnia
C4	large radial clearance

SPECIFICATIONS

Manufacturer	**KOYO**
Manufacturer designation	**6304 C4**
Rolling elements	**single-row ball bearing**