Deep groove ball bearing 6304-ZZEC3 INNE

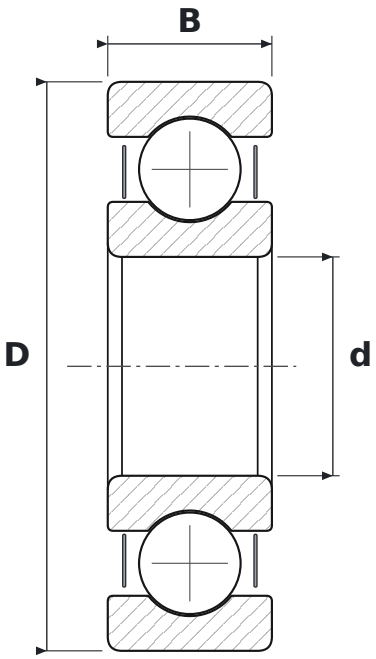

DIMENSIONS

d	bore diameter	**20 mm**
D	outside diameter	**52 mm**
B	width	**15 mm**

WHAT 6304-ZZEC3 MEANS

63	łożysko kulkowe zwykłe (6), seria średnic 3 – średnia
ZZ	blaszki ochronne, dwustronne
E	reinforced design, higher load rating
C3	radial clearance greater than normal

SPECIFICATIONS

Manufacturer	**INNE**
Manufacturer designation	**6304-ZZEC3**
Rolling elements	**single-row ball bearing**
Mass	**0.14 kg**