Deep groove ball bearing 6304-ZZENRCM NACHI

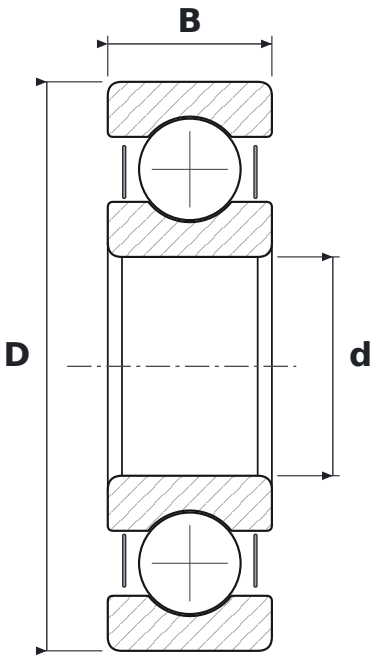

DIMENSIONS

d	bore diameter	**20 mm**
D	outside diameter	**52 mm**
B	width	**15 mm**

WHAT 6304-ZZENRCM MEANS

63	łożysko kulkowe zwykłe (6), seria średnic 3 – średnia
ZZE	blaszki ochronne, dwustronne
NR	snap ring groove with snap ring
CM	clearance for electric motors (quiet running)

SPECIFICATIONS

Manufacturer	**NACHI**
Manufacturer designation	**6304-ZZENRCM**
Rolling elements	**single-row ball bearing**