Deep groove ball bearing 6305-2Z SKF

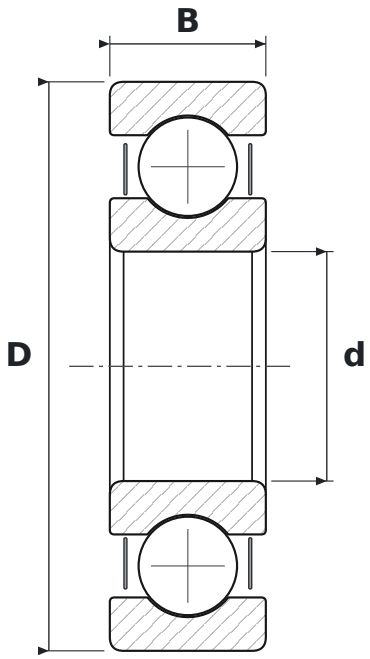

DIMENSIONS

d	bore diameter	**25 mm**
D	outside diameter	**62 mm**
B	width	**17 mm**

WHAT 6305-2Z MEANS

63	łożysko kulkowe zwykłe (6), seria średnic 3 – średnia
2Z	steel shields, both sides

SPECIFICATIONS

Manufacturer	**SKF**
Manufacturer designation	**6305-2Z**
Rolling elements	**single-row ball bearing**
Basic dynamic load rating C	**23.4 kN**
Basic static load rating C0	**11.6 kN**