# Deep groove ball bearing 6305 NR NACHI

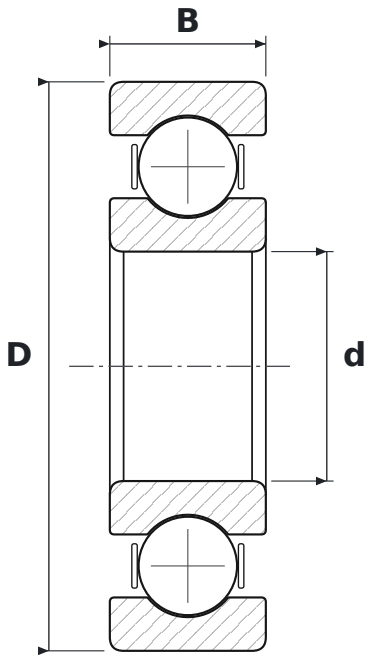


## DIMENSIONS

| | | |
|---|---|---|
| **d** | bore diameter | **25 mm** |
| **D** | outside diameter | **62 mm** |
| **B** | width | **17 mm** |

## WHAT 6305 NR MEANS

| | |
|---|---|
| **63** | łożysko kulkowe zwykłe (6), seria średnic 3 – średnia |
| **NR** | snap ring groove with snap ring |

## SPECIFICATIONS

| | |
|---|---|
| Manufacturer | **NACHI** |
| Manufacturer designation | **6305 NR** |
| Rolling elements | **single-row ball bearing** |