Deep groove ball bearing 6305 TIMKEN

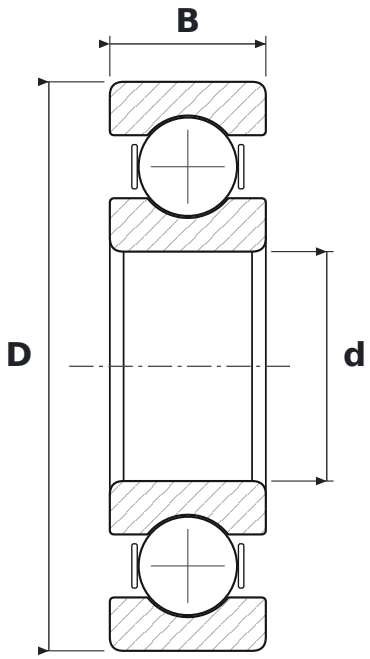

DIMENSIONS

d	bore diameter	**25 mm**
D	outside diameter	**62 mm**
B	width	**17 mm**

SPECIFICATIONS

Manufacturer	**TIMKEN**
Manufacturer designation	**6305**
Rolling elements	**single-row ball bearing**
Seal	**open – no seals**
Radial internal clearance	**CN – normal**