CASTOMER

DATASHEET

Deep groove ball bearing 6305-ZZC45K NTN

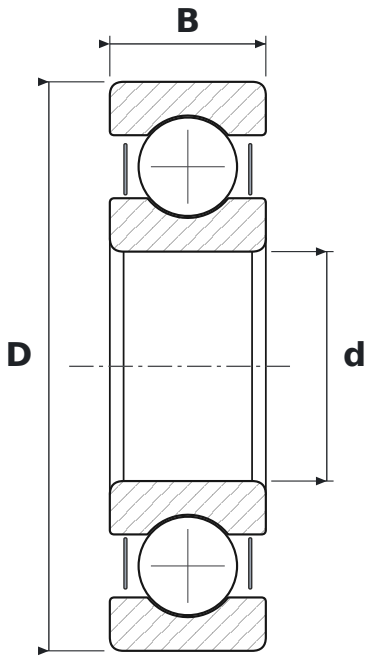

DIMENSIONS

d	bore diameter	**25 mm**
D	outside diameter	**62 mm**
B	width	**17 mm**

WHAT 6305-ZZC45K MEANS

63	łożysko kulkowe zwykłe (6), seria średnic 3 – średnia
ZZ	blaszki ochronne, dwustronne
C4	large radial clearance
5K	smar Kyodo Yushi Multemp SRL (od −40 do +150 °C)

SPECIFICATIONS

Manufacturer	**NTN**
Manufacturer designation	**6305-ZZC45K**
Rolling elements	**single-row ball bearing**
Mass	**0.23 kg**