# Deep groove ball bearing 6305-ZZEC3 INNE

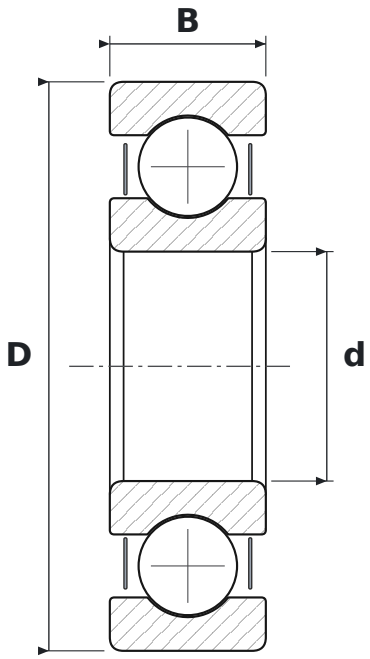


## DIMENSIONS

| | | |
|---|---|---|
| **d** | bore diameter | **25 mm** |
| **D** | outside diameter | **62 mm** |
| **B** | width | **17 mm** |

## WHAT 6305-ZZEC3 MEANS

| | |
|---|---|
| **63** | łożysko kulkowe zwykłe (6), seria średnic 3 – średnia |
| **ZZ** | blaszki ochronne, dwustronne |
| **E** | reinforced design, higher load rating |
| **C3** | radial clearance greater than normal |

## SPECIFICATIONS

| | |
|---|---|
| Manufacturer | **INNE** |
| Manufacturer designation | **6305-ZZEC3** |
| Rolling elements | **single-row ball bearing** |
| Mass | **0.22 kg** |