Deep groove ball bearing 6306-2Z ZEN

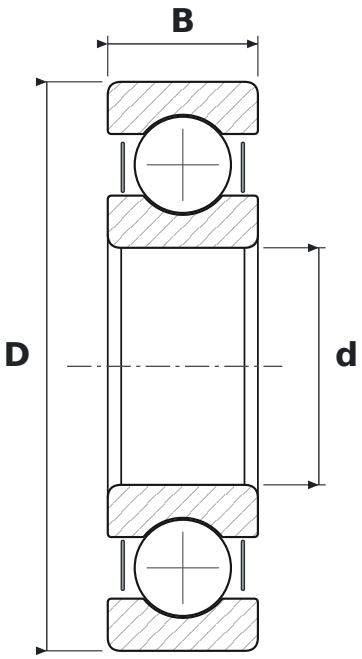

DIMENSIONS

d	bore diameter	**30 mm**
D	outside diameter	**72 mm**
B	width	**19 mm**

WHAT 6306-2Z MEANS

63	łożysko kulkowe zwykłe (6), seria średnic 3 – średnia
2Z	steel shields, both sides

SPECIFICATIONS

Manufacturer	**ZEN**
Manufacturer designation	**6306-2Z**
Rolling elements	**single-row ball bearing**
Mass	**0.345 kg**