# Deep groove ball bearing 6306-2ZC3 ZEN

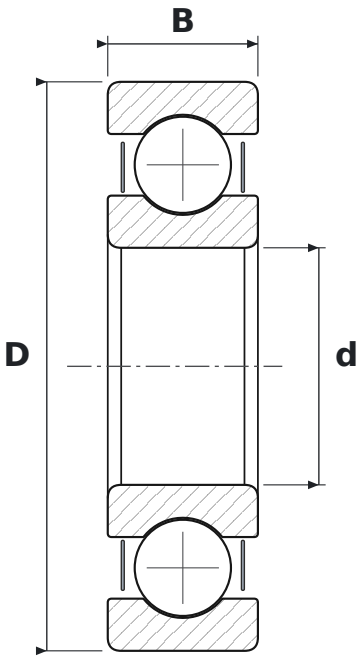


## DIMENSIONS

| | | |
|---|---|---|
| **d** | bore diameter | **30 mm** |
| **D** | outside diameter | **72 mm** |
| **B** | width | **19 mm** |

## WHAT 6306-2ZC3 MEANS

| | |
|---|---|
| **63** | łożysko kulkowe zwykłe (6), seria średnic 3 – średnia |
| **2Z** | steel shields, both sides |
| **C3** | radial clearance greater than normal |

## SPECIFICATIONS

| | |
|---|---|
| Manufacturer | **ZEN** |
| Manufacturer designation | **6306-2ZC3** |
| Rolling elements | **single-row ball bearing** |