Deep groove ball bearing 6306 CM NACHI

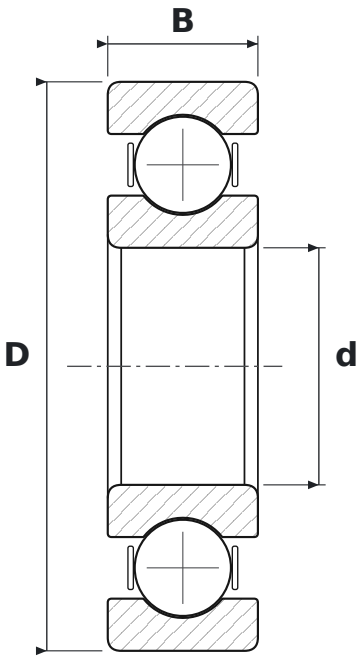

DIMENSIONS

d	bore diameter	**30 mm**
D	outside diameter	**72 mm**
B	width	**19 mm**

WHAT 6306 CM MEANS

63	łożysko kulkowe zwykłe (6), seria średnic 3 – średnia
CM	clearance for electric motors (quiet running)

SPECIFICATIONS

Manufacturer	**NACHI**
Manufacturer designation	**6306 CM**
Rolling elements	**single-row ball bearing**