CASTOMER

DATASHEET

Deep groove ball bearing 6306-ZZECM INNE

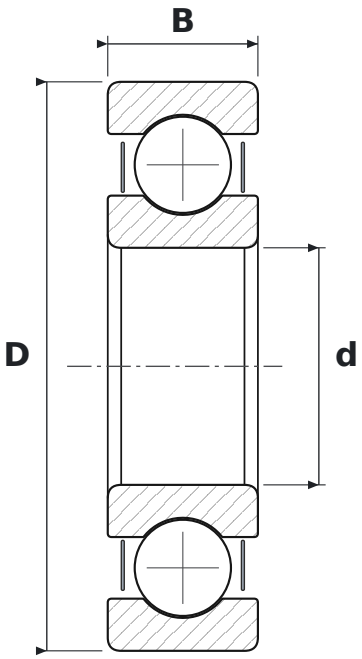

DIMENSIONS

d	bore diameter	**30 mm**
D	outside diameter	**72 mm**
B	width	**19 mm**

WHAT 6306-ZZECM MEANS

63	łożysko kulkowe zwykłe (6), seria średnic 3 – średnia
ZZ	blaszki ochronne, dwustronne
ECM	EC design, machined brass cage (SKF)

SPECIFICATIONS

Manufacturer	**INNE**
Manufacturer designation	**6306-ZZECM**
Rolling elements	**single-row ball bearing**
Mass	**0.35 kg**