Deep groove ball bearing 6307 CM NTN

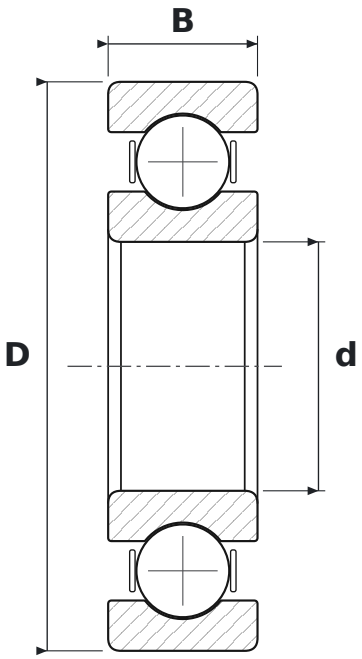

DIMENSIONS

d	bore diameter	**35 mm**
D	outside diameter	**80 mm**
B	width	**21 mm**

WHAT 6307 CM MEANS

63	łożysko kulkowe zwykłe (6), seria średnic 3 – średnia
CM	clearance for electric motors (quiet running)

SPECIFICATIONS

Manufacturer	**NTN**
Manufacturer designation	**6307 CM**
Rolling elements	**single-row ball bearing**