Deep groove ball bearing 6307 NR NKE

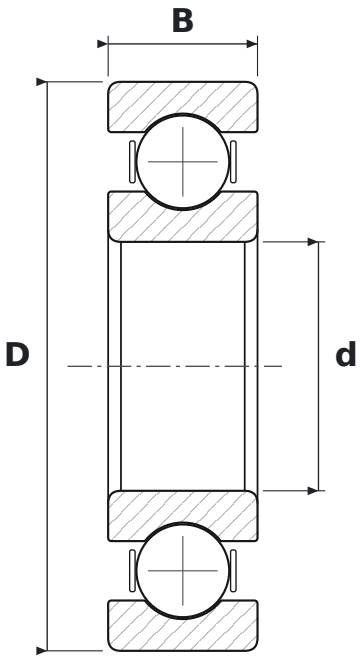

DIMENSIONS

d	bore diameter	**35 mm**
D	outside diameter	**80 mm**
B	width	**21 mm**

WHAT 6307 NR MEANS

63	łożysko kulkowe zwykłe (6), seria średnic 3 – średnia
NR	snap ring groove with snap ring

SPECIFICATIONS

Manufacturer	**NKE**
Manufacturer designation	**6307 NR**
Rolling elements	**single-row ball bearing**