CASTOMER

DATASHEET

Deep groove ball bearing 6307 NR SKF

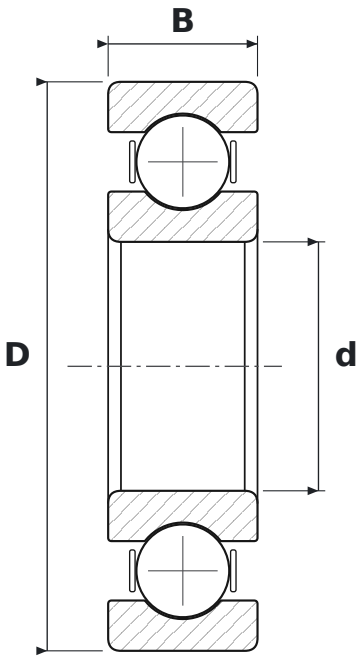

DIMENSIONS

d	bore diameter	**35 mm**
D	outside diameter	**80 mm**
B	width	**21 mm**

WHAT 6307 NR MEANS

63	łożysko kulkowe zwykłe (6), seria średnic 3 – średnia
NR	snap ring groove with snap ring

SPECIFICATIONS

Manufacturer	**SKF**
Manufacturer designation	**6307 NR**
Rolling elements	**single-row ball bearing**
Basic dynamic load rating C	**35.1 kN**
Basic static load rating C0	**19 kN**