Deep groove ball bearing 6308-2RS-C3 TIMKEN

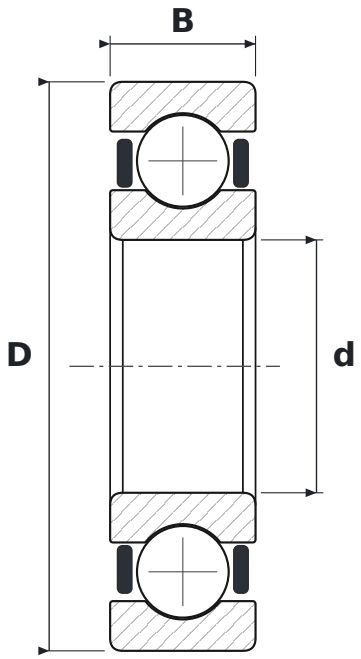

DIMENSIONS

d	bore diameter	**40 mm**
D	outside diameter	**90 mm**
B	width	**23 mm**

WHAT 6308-2RS-C3 MEANS

63	łożysko kulkowe zwykłe (6), seria średnic 3 – średnia
2RS	contact rubber seals, both sides
C3	radial clearance greater than normal

SPECIFICATIONS

Manufacturer	**TIMKEN**
Manufacturer designation	**6308-2RS-C3**
Rolling elements	**single-row ball bearing**