Deep groove ball bearing 6308 CM NACHI

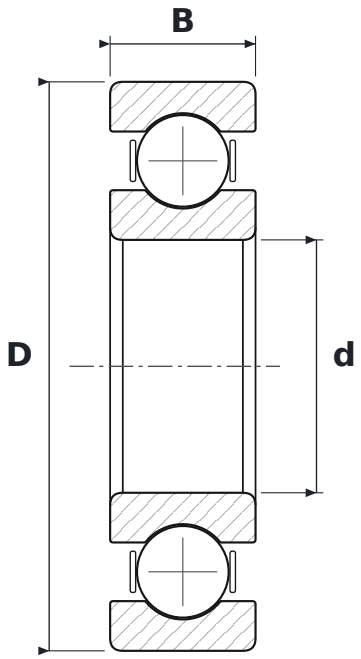

DIMENSIONS

d	bore diameter	**40 mm**
D	outside diameter	**90 mm**
B	width	**23 mm**

WHAT 6308 CM MEANS

63	łożysko kulkowe zwykłe (6), seria średnic 3 – średnia
CM	clearance for electric motors (quiet running)

SPECIFICATIONS

Manufacturer	**NACHI**
Manufacturer designation	**6308 CM**
Rolling elements	**single-row ball bearing**