# Deep groove ball bearing 6308 ZZ NSK

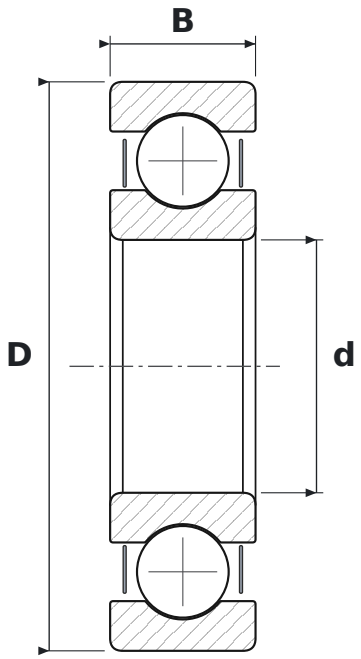


## DIMENSIONS

| | | |
|---|---|---|
| **d** | bore diameter | **40 mm** |
| **D** | outside diameter | **90 mm** |
| **B** | width | **23 mm** |

## WHAT 6308 ZZ MEANS

| | |
|---|---|
| **63** | łożysko kulkowe zwykłe (6), seria średnic 3 – średnia |
| **ZZ** | blaszki ochronne, dwustronne |

## SPECIFICATIONS

| | |
|---|---|
| Manufacturer | **NSK** |
| Manufacturer designation | **6308 ZZ** |
| Rolling elements | **single-row ball bearing** |