Deep groove ball bearing 6308-2Z/C3 SKF

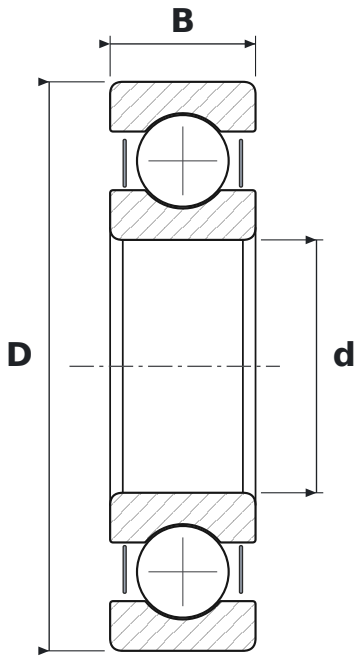

DIMENSIONS

d	bore diameter	**40 mm**
D	outside diameter	**90 mm**
B	width	**23 mm**

WHAT 6308-2Z/C3 MEANS

63	łożysko kulkowe zwykłe (6), seria średnic 3 – średnia
2Z	steel shields, both sides
C3	radial clearance greater than normal

SPECIFICATIONS

Manufacturer	**SKF**
Manufacturer designation	**6308-2Z/C3**
Rolling elements	**single-row ball bearing**
Basic dynamic load rating C	**42.3 kN**
Basic static load rating C0	**24 kN**
Mass	**0.635 kg**