CASTOMER

DATASHEET

Deep groove ball bearing 6309-C3 ZEN

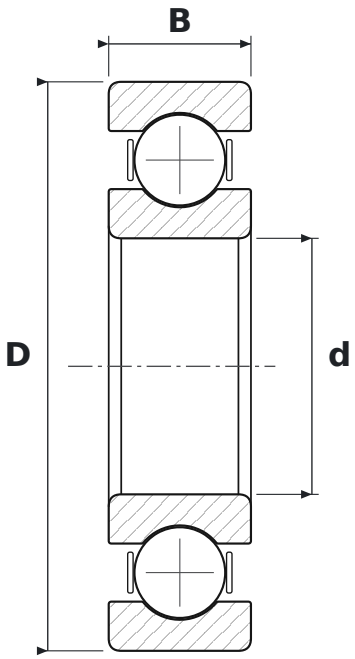

DIMENSIONS

d	bore diameter	**45 mm**
D	outside diameter	**100 mm**
B	width	**25 mm**

WHAT 6309-C3 MEANS

63	łożysko kulkowe zwykłe (6), seria średnic 3 – średnia
C3	radial clearance greater than normal

SPECIFICATIONS

Manufacturer	**ZEN**
Manufacturer designation	**6309-C3**
Rolling elements	**single-row ball bearing**