Deep groove ball bearing 6309 NRC3 NACHI

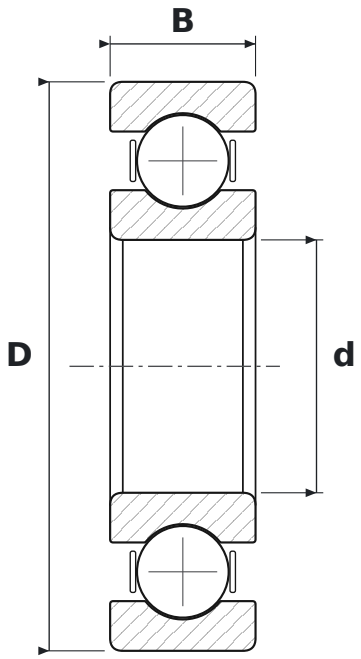

DIMENSIONS

d	bore diameter	**40 mm**
D	outside diameter	**90 mm**
B	width	**23 mm**

WHAT 6309 NRC3 MEANS

NR	snap ring groove with snap ring
C3	radial clearance greater than normal

SPECIFICATIONS

Manufacturer	**NACHI**
Manufacturer designation	**6309 NRC3**
Rolling elements	**single-row ball bearing**