# Deep groove ball bearing 6309-RSR FAG

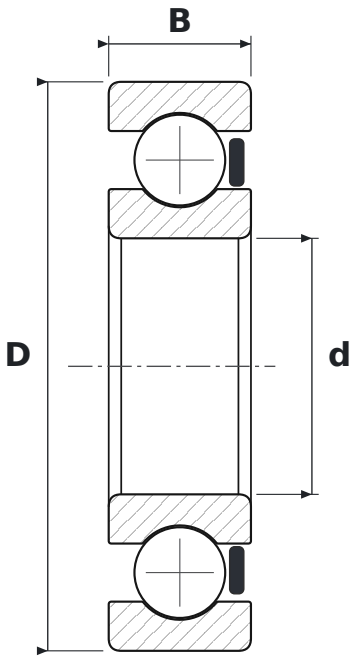


## DIMENSIONS

| | | |
|---|---|---|
| **d** | bore diameter | **45 mm** |
| **D** | outside diameter | **100 mm** |
| **B** | width | **25 mm** |

## WHAT 6309-RSR MEANS

| | |
|---|---|
| **63** | łożysko kulkowe zwykłe (6), seria średnic 3 – średnia |
| **RSR** | uszczelnienie wargowe z gumy NBR (stykowe) z jednej strony |

## SPECIFICATIONS

| | |
|---|---|
| Manufacturer | **FAG** |
| Manufacturer designation | **6309-RSR** |
| Rolling elements | **single-row ball bearing** |
| Mass | **0.85 kg** |