CASTOMER

DATASHEET

Deep groove ball bearing 6309-ZECM INNE

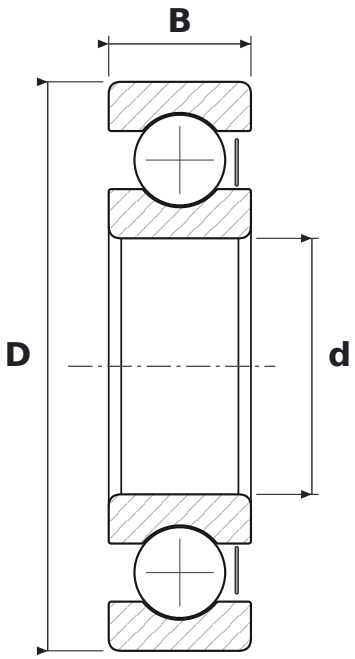

DIMENSIONS

d	bore diameter	**45 mm**
D	outside diameter	**100 mm**
B	width	**25 mm**

WHAT 6309-ZECM MEANS

63	łożysko kulkowe zwykłe (6), seria średnic 3 – średnia
Z	steel shield, one side
ECM	EC design, machined brass cage (SKF)

SPECIFICATIONS

Manufacturer	**INNE**
Manufacturer designation	**6309-ZECM**
Rolling elements	**single-row ball bearing**
Mass	**0.82 kg**