Deep groove ball bearing 6309 ZZ SNR

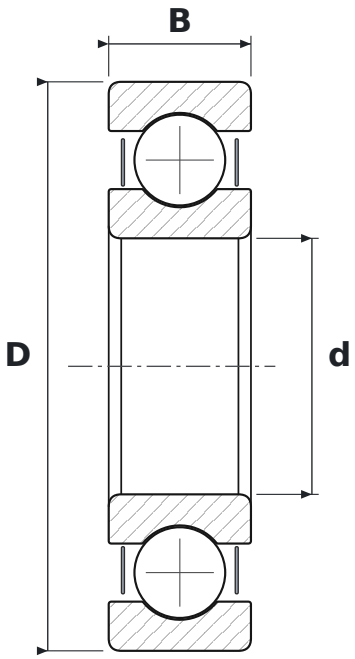

DIMENSIONS

d	bore diameter	**45 mm**
D	outside diameter	**100 mm**
B	width	**25 mm**

WHAT 6309 ZZ MEANS

63	łożysko kulkowe zwykłe (6), seria średnic 3 – średnia
ZZ	blaszki ochronne, dwustronne

SPECIFICATIONS

Manufacturer	**SNR**
Manufacturer designation	**6309 ZZ**
Rolling elements	**single-row ball bearing**